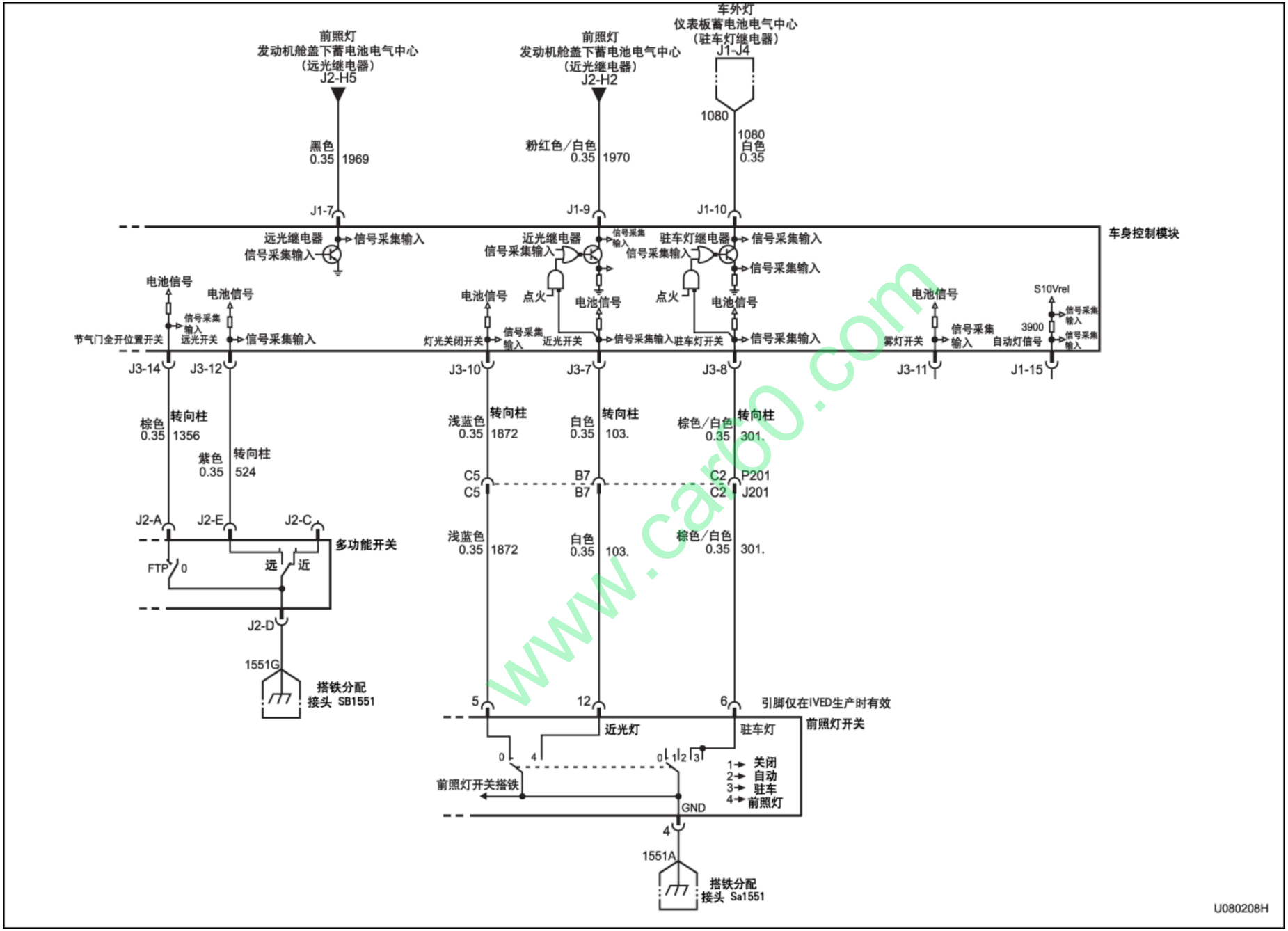

www.carbo.com